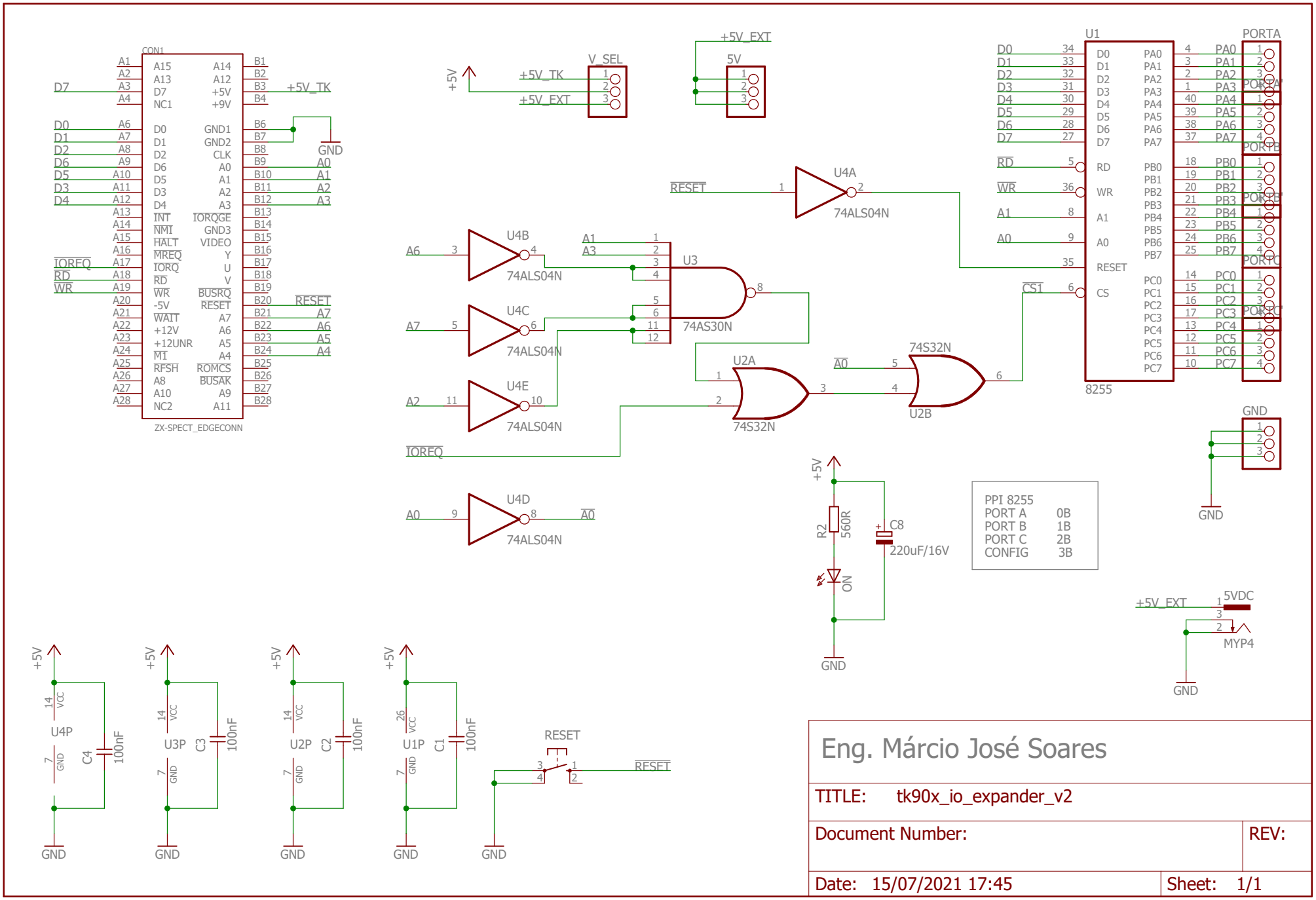

Eng. Márcio José Soares

TITLE: tk90x_io_expander_v2

Document Number:

REV:

Date: 15/07/2021 17:45

Sheet: 1/1