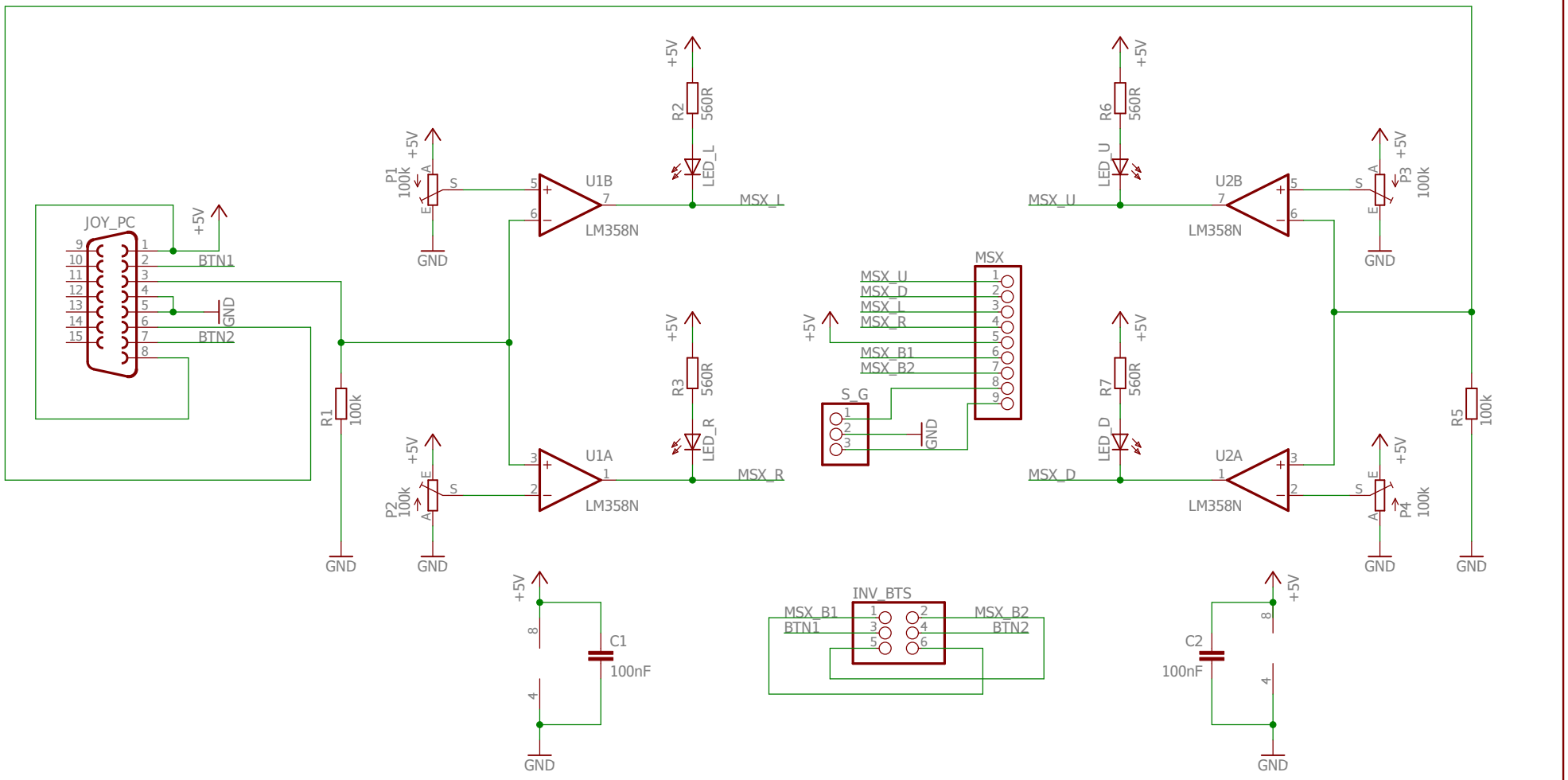


Eng. Marcio Jose Soares

TITLE: MSX_JoyPC_v1.2

Document Number:

REV:

Date: 21/07/2024 15:41:15

Sheet: 1/1