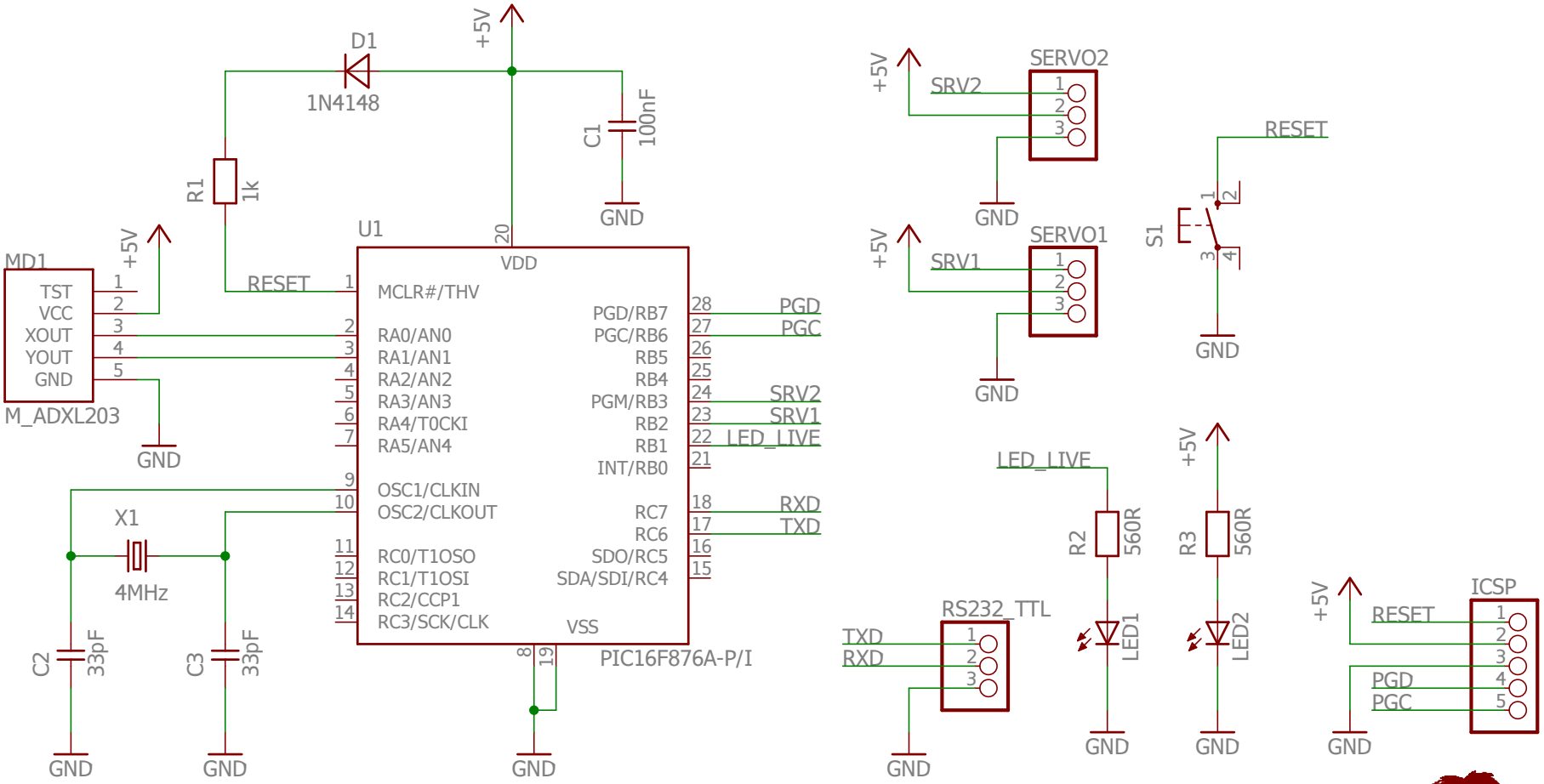

Eng. Marcio Jose Soares

TITLE: PIC_ADXL203

Document Number:

REV: 1.0

Date: not saved!

Sheet: 1/1