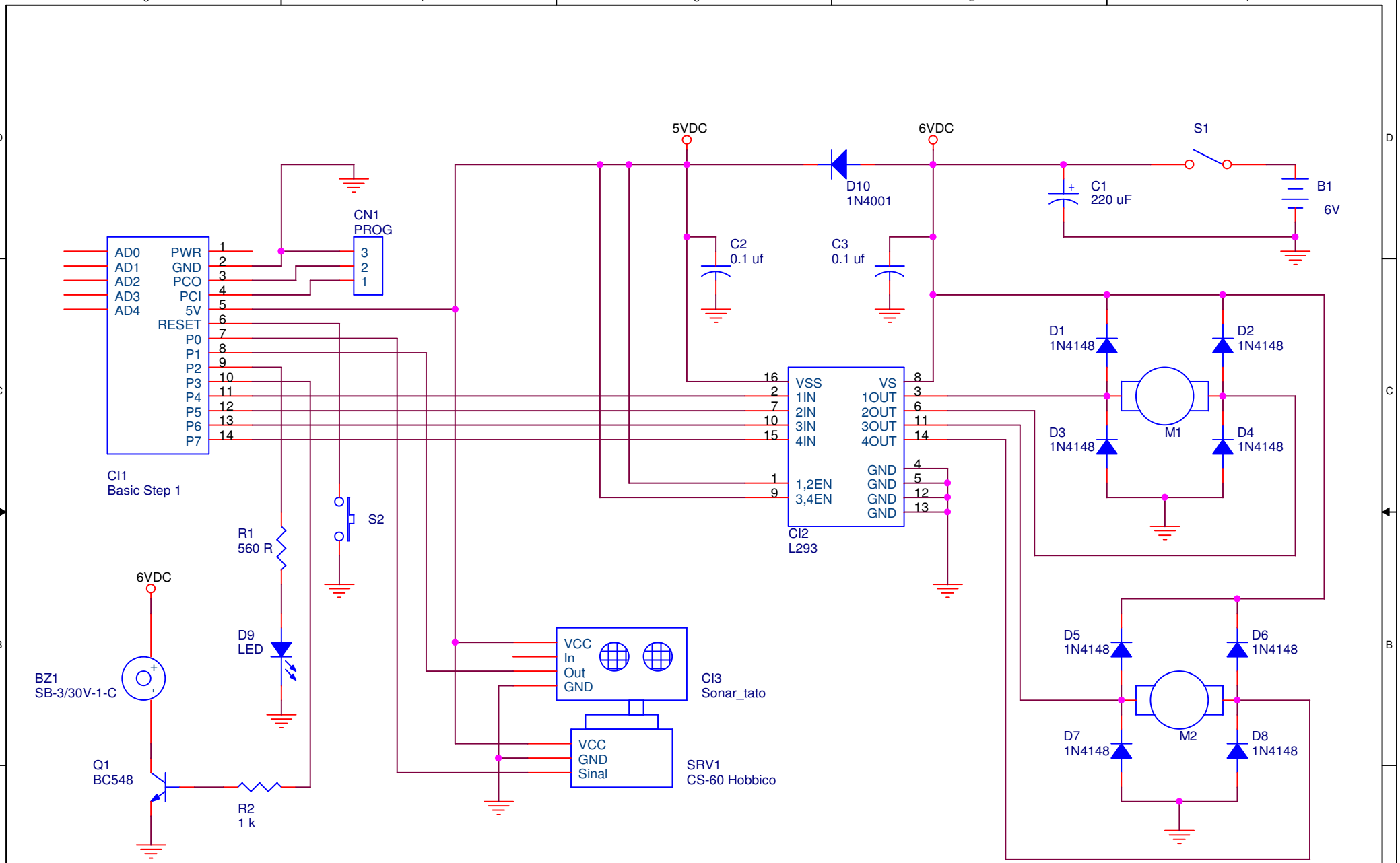

Márcio José Soares		
Title: Robô Inteligente		
Size: A	Document Number: robo_inteligente.sch	Rev: 1.0
Date: Thursday, July 22, 2004	Sheet 1 of 1	