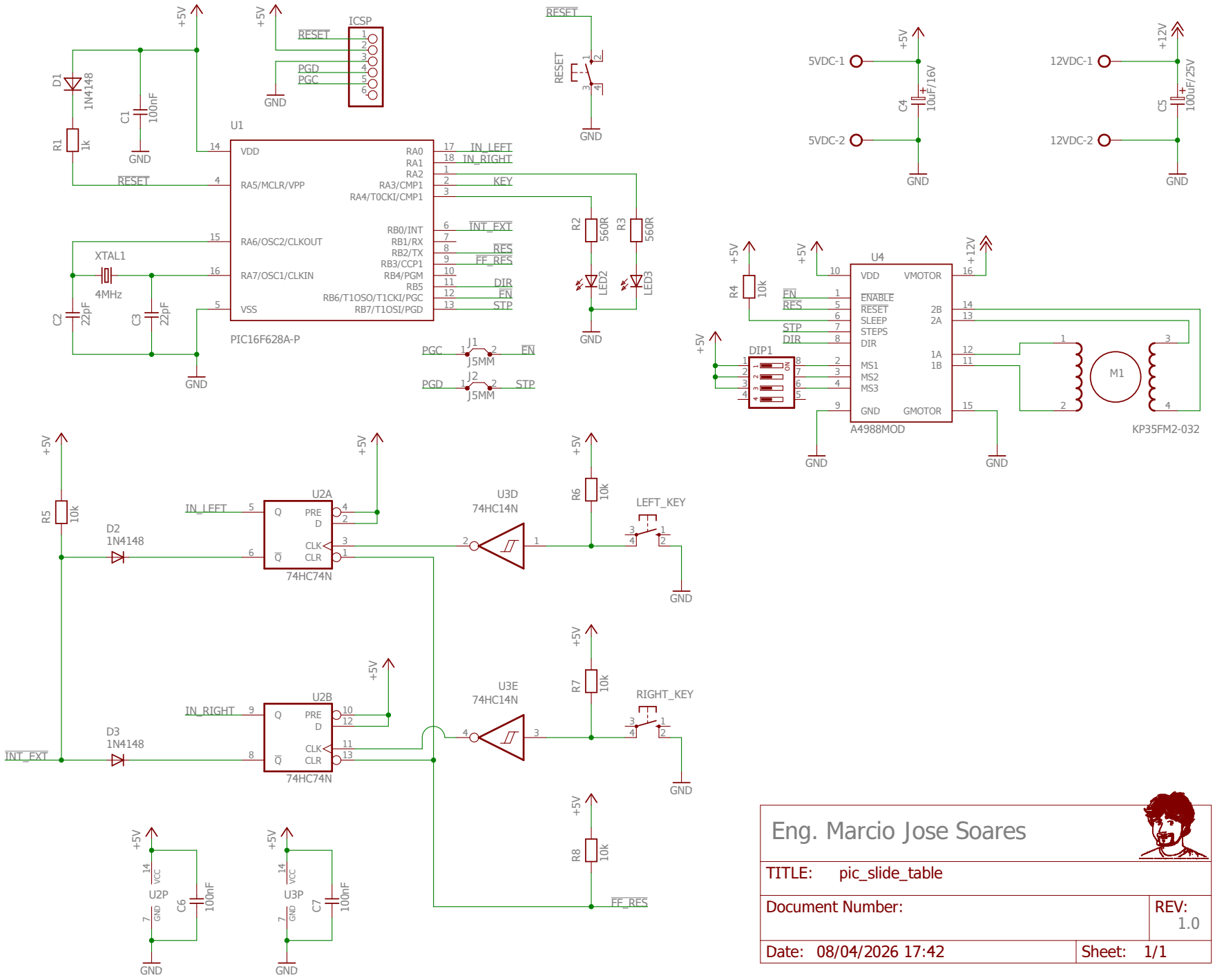

Eng. Marcio Jose Soares

TITLE: pic_slide_table	
Document Number:	REV: 1.0
Date: 08/04/2026 17:42	Sheet: 1/1