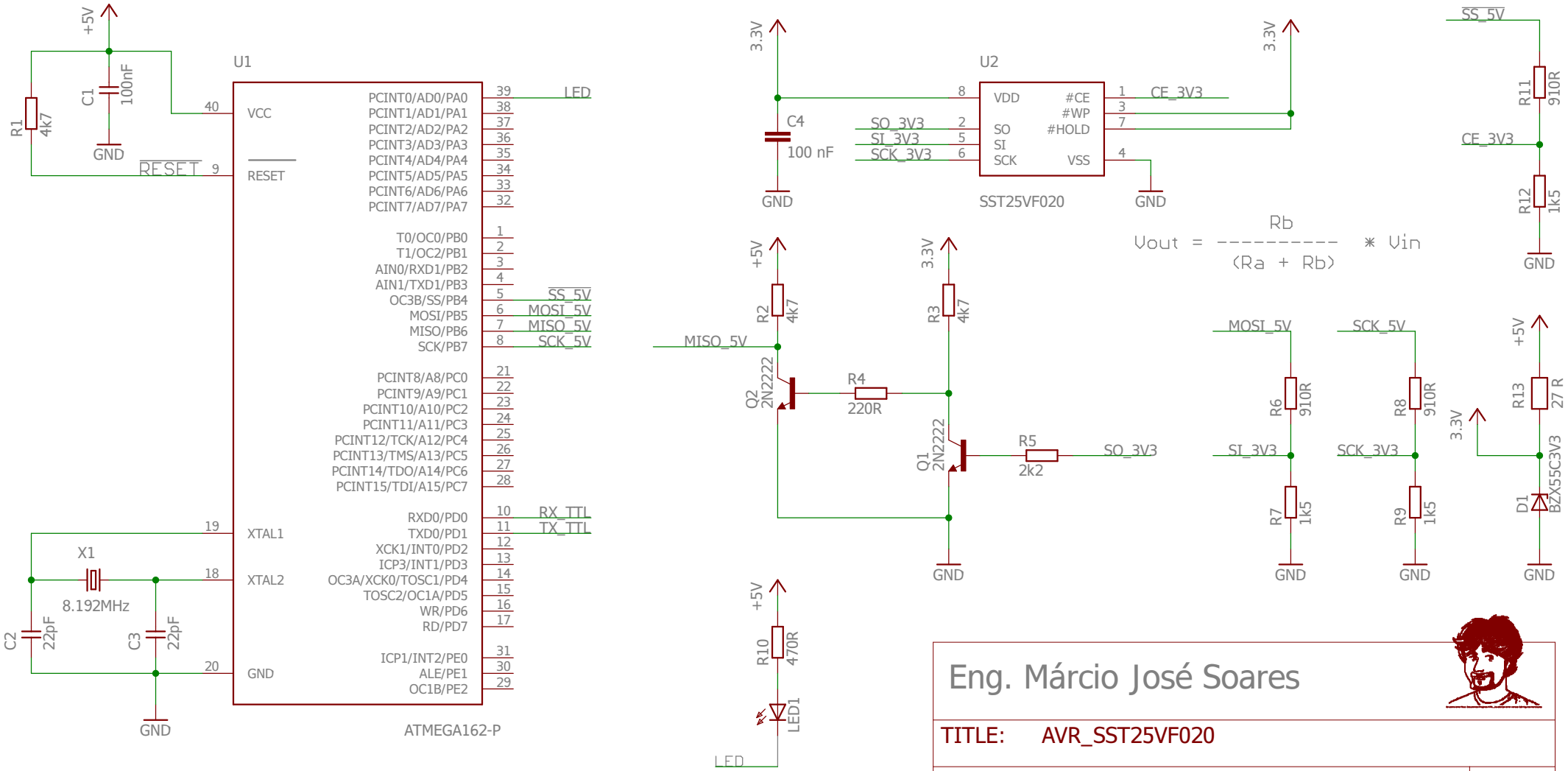

Eng. Márcio José Soares

TITLE: AVR_SST25VF020	
Document Number:	REV:
Date: 21/2/2024 10:51	Sheet: 1/1