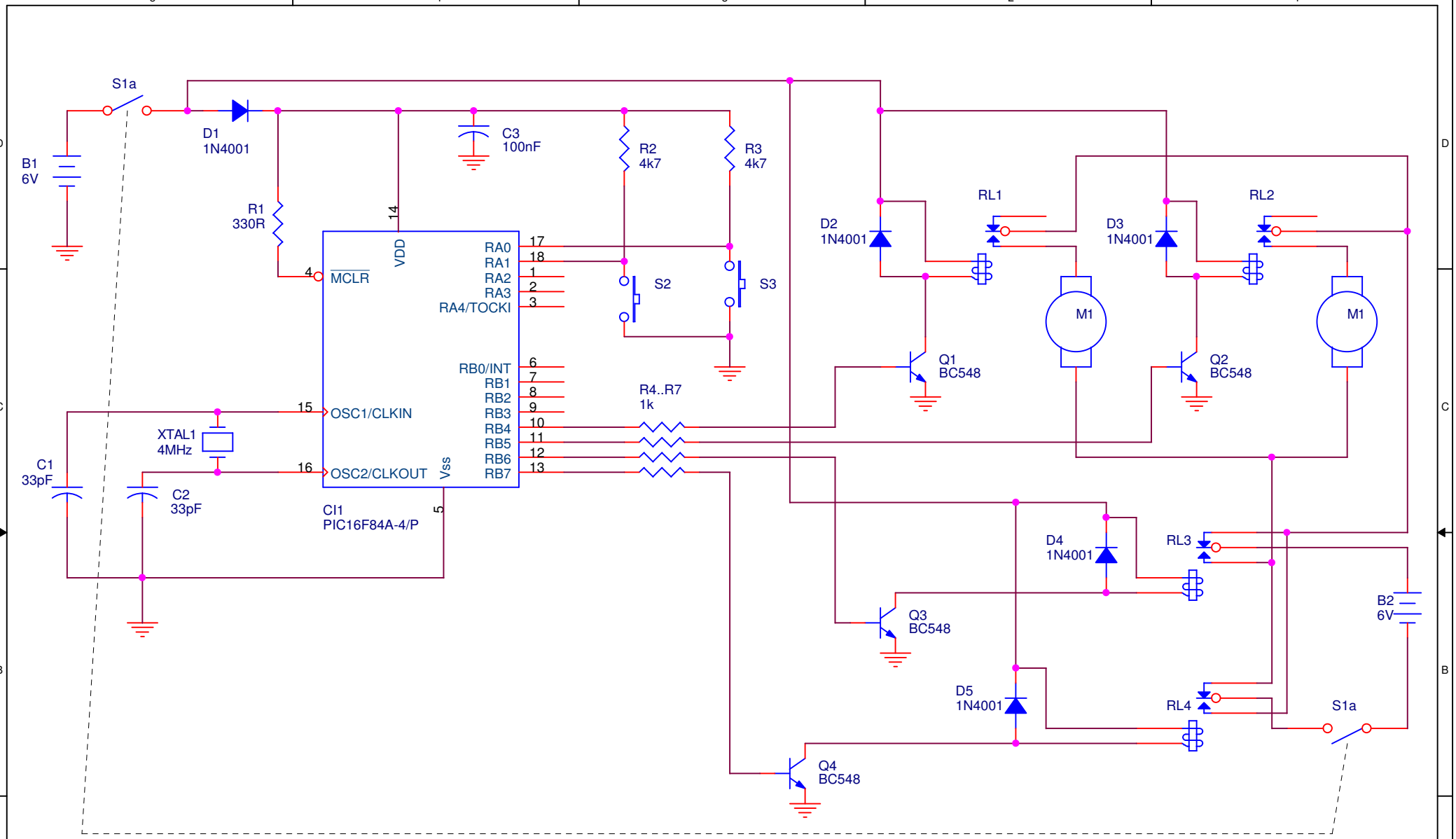

Title	ROBO PIC - primeiro robô com PIC	
Size A	Document Number robo_pic_sch	Rev 1.0
Date: Wednesday, October 15, 2003	Sheet 1 of 1	