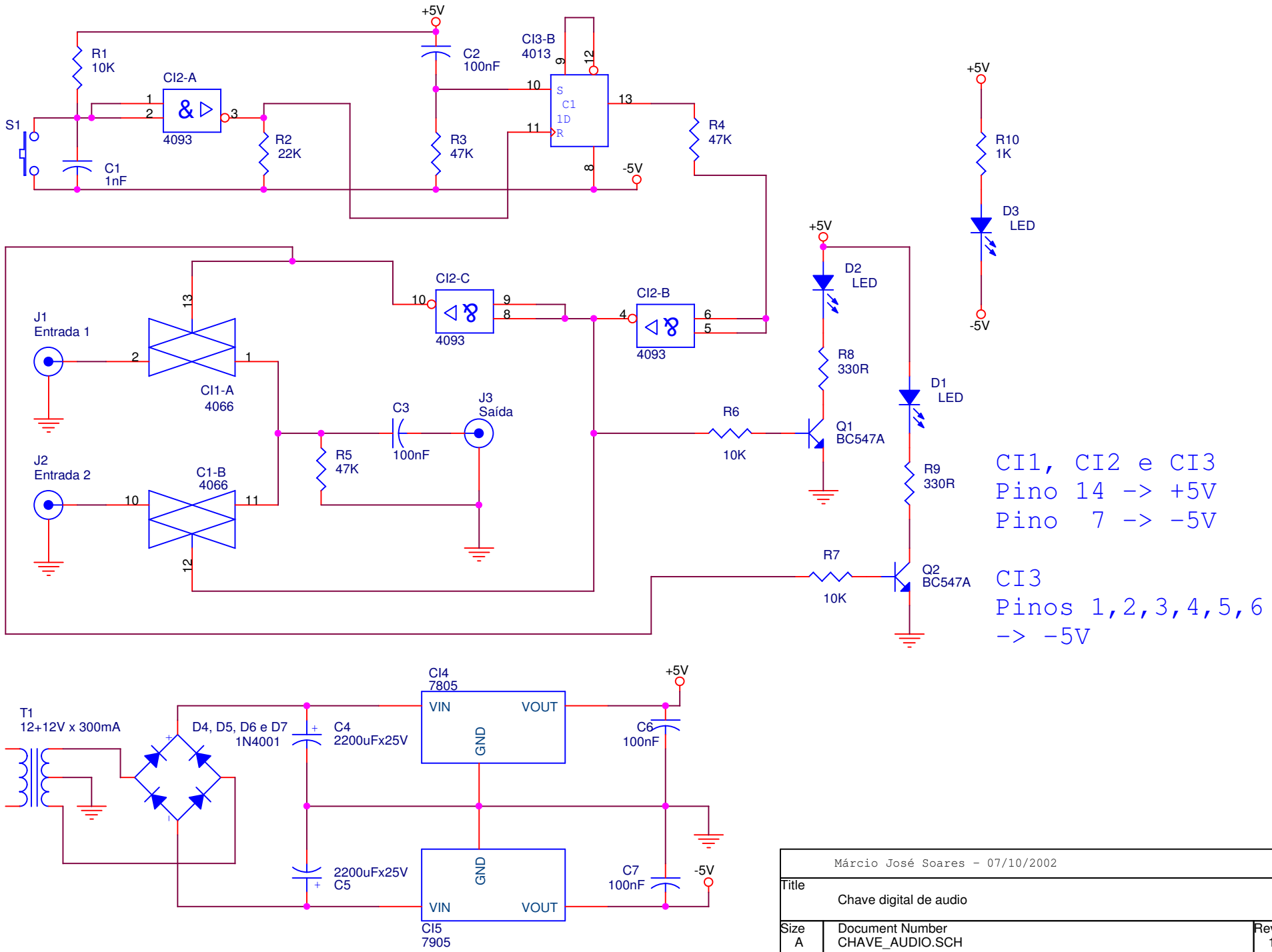

Márcio José Soares - 07/10/2002

Title: Chave digital de audio

Size: A | Document Number: CHAVE_AUDIO.SCH | Rev: 1.0

Date: Monday, November 25, 2002 | Sheet 1 of 1